Hi-Res PS/2 KVM Extender via CAT5: Extend to 1,000 feet

XTENDEX®

How to extend VGA Video Keyboard Mouse control up to 1000 feet away from computers or NTI KVM Switches

- Industry-leading ultra high resolutions up to 2048x1536.
- High quality, rugged steel construction with durable powder coat finish.
- Automatically adjust video quality and color skew for crystal clear video with longer cables.
- Available options: two-way audio (support for speakers and microphone), RS232, two-way audio + RS232.
- DDC2B support for local or remote monitor (user selectable).
- Built-in surge protection.

XTENDEX® ST-C5KVM2ARS-1000S
(Remote and Local Units)

- **Two-way Audio**
- **RS232**
- **Two-way Audio + RS232**

The XTENDEX® KVM Extender provides local and remote KVM (PS/2 keyboard, PS/2 mouse and VGA video monitor) access to a PC up to 1,000 feet using CAT5/5E/6 RJ45 cable. The extender consists of a local unit that connects to a computer and provides local keyboard, monitor and mouse connections, and a remote unit that connects to a keyboard, monitor and mouse.

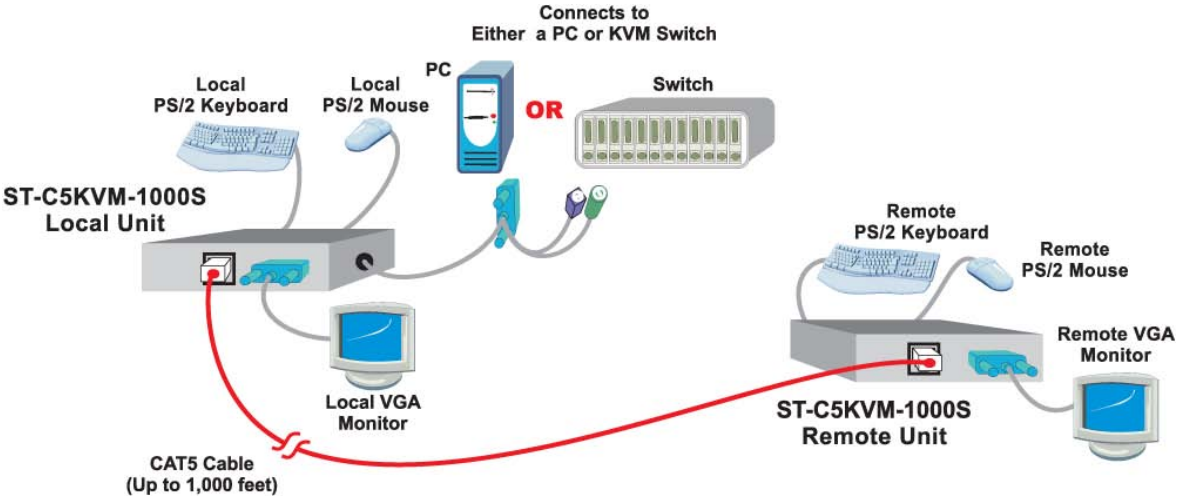

Specifications

Local Unit

Host Connection

- Supports a PS/2 PC.
- Multiplatform support: Windows 2000/XP/Vista/Server 2000/2003/2008, Linux, Solaris x86 and FreeBSD.
- One male 15-pin HD connector.
- Two male 6-pin miniDIN connectors.
- Two-way audio option: two 3.5mm stereo plugs (audio in/mic out).
- RS232 option: female 9-pin D connector.
- Two-way audio + RS232 option: two 3.5mm stereo plugs (audio in/mic out), female 9-pin D connector.

Local Access

- Crisp and clear 2048x1536 video resolution.
- One female 15-pin HD connector.
- Two female 6-pin miniDIN connectors.
  - NTI recommends using identical keyboards and mice at local and remote units.
- Two-way audio option: two 3.5mm stereo jacks (audio out/mic in).
- RS232 option: female RJ45 connector.
- Two-way audio + RS232 option: two 3.5mm stereo jacks (audio out/mic in), female RJ45 connector.

NETWORK TECHNOLOGIES INCORPORATED
1.800.RGB.TECH (800.742.8324) Toll Free: US & Canada
330.562.7070 International calls
330.562.1999 Worldwide fax
sales@ntigo.com
www.networktechinc.com
© 2007, 2014 NTI. All rights reserved.

How to extend VGA Video Keyboard Mouse control up to 1000 feet away from computers or NTI KVM Switches

Specifications (Continued)

Remote Unit

- Supports resolutions up to 2048x1536.
- One female 15-pin HD connector.
- Two female 6-pin miniDIN connectors.
- Two-way audio option: two 3.5mm stereo jacks (audio out/mic in).
- RS232 option: female RJ45 connector.
- Two-way audio + RS232 option: two 3.5mm stereo jacks (audio out/mic in), female RJ45 connector.

Video Quality Adjustment

- Automatically adjusts the video quality and color skew to compensate for varying lengths of CAT5/5e/6 cable.
  - Maximum delay: 62ns in 2ns steps.
- Fine adjustment available via push buttons on the remote unit.
- Settings are automatically stored in the unit. The next time the unit is powered on, the adjustment will be recalled.

Environmental

- Operating temperature: 32°F to 122°F (0°C to 50°C)
- Storage temperature: -20°F to 140°F (-30°C to 60°C)
- Operating and Storage Relative Humidity: 17 to 90% non-condensing RH.

Dimensions

- WxDxH(in): 5.05x3.08x1.09

Power

- Local and remote unit: 120 VAC at 60 Hz 9 VDC/1.0A via AC adapters or 230 VAC at 50 Hz 9 VDC/1.5A via AC adapters.
- Power Consumption: 10W (each - local and remote unit).

Regulatory Approvals

- CE, RoHS
- TAA compliant

Warranty

- Two years.

Options

- Choose between two-way audio, RS232, or two-way audio + RS232

Two-way Audio

- Stereo audio
  - Stereo audio can be heard both locally and remotely.
  - Frequency response: 20 Hz to 20 kHz, +/- 1 dB.
  - Signal-to-Noise Ratio (SNR): >76 dBA.
  - Total Harmonic Distortion and Noise (THD+N): 0.017%.
  - Stereo crosstalk: -70 dB.
  - Input impedance: 10k Ohms.
  - Line level output; supports multimedia speakers.
  - Maximum I/O levels: 3.1Vp-p (line level).
  - CD quality audio output.
- Microphone
  - Microphone can be used locally and remotely, user selectable.
  - Supports electret microphones.
  - Input impedance: 10k Ohms.
  - Maximum I/O levels: 1V, unbalanced

RS232

- Supports TXD, RXD, DTR, DSR, DCD, CTS and RTS.
- Baud rate up to 57.6K.
- Support for a touch screen monitor..

PS/2 KVM Extender Models

Supported Features	NTI Part #
KVM	ST-C5KVM-1000S
KVM + two-way audio	ST-C5KVM2A-1000S
KVM + RS232	ST-C5KVMRS-1000S
KVM + two-way audio + RS232	ST-C5KVM2ARS-1000S

Cables

- Use CAT5, CAT5e or CAT6 straight through cable for TIA/EIA-568B wiring terminated with standard RJ45 connectors.
  - Supports minimum cable length of 100 feet and maximum length of 1,000 feet.
  - Cables not included.

Distances and Resolutions for CAT5/Cat5e and CAT6 Cables

Cable	Distance (ft)	Resolution
CAT5/CAT5e (UTP)	1000	1920x1200 at 60Hz
	800	1920x1440 at 60Hz
	600	2048x1536 at 60Hz
CAT6 (UTP)	800	1920x1440 at 60Hz
	600	2048x1536 at 60Hz
CAT5/5e (STP)	800	1920x1200 at 60Hz
	600	1920x1440 at 60Hz
	400	2048x1536 at 60Hz
CAT6 (STP)	400	1280x1024 at 60Hz
	300	1600x1200 at 60Hz
	200	2048x1536 at 60Hz

NETWORK TECHNOLOGIES INCORPORATED
1.800.RGB.TECH (800.742.8324) Toll Free: US & Canada
330.562.7070 International calls
330.562.1999 Worldwide fax
sales@ntigo.com
www.networktechinc.com

© 2007, 2014 NTI. All rights reserved.